1-010-1081

COPYRIGHT RESERVED

This document is the property of TEMA and is protected by copyright. The document and its contents are proprietary to TEMA and may not be passed to any other party without the prior written consent of TEMA.

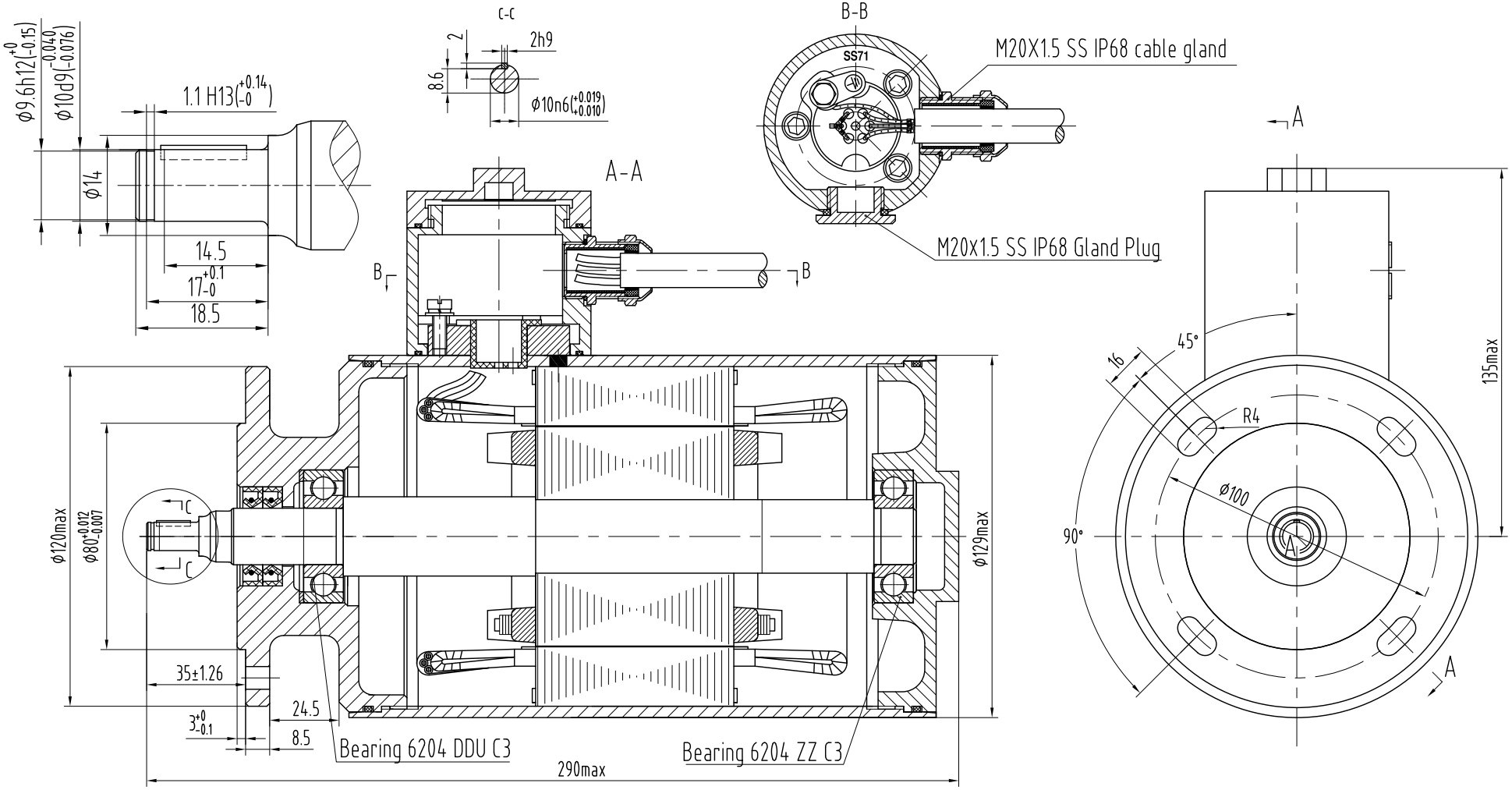

Type	Power		Weight
	HP	kW	
SEW711-2	0.5	0.37kW	14.6
SEW712-2	0.75	0.55kW	14.6
SEW711-4	0.35	0.25kW	14.4
SEW712-4	0.5	0.37kW	14.4

ZONE	REV	DESCRIPTION	DATE	APPROVED
	3	Changed dimension 17 to 17(+0.1/-0),Ø10d9(-0.050/-0.093) to Ø10d9(-0.040/-0.076), Removed dimension Ø9.2	31/07/2015	
	2	Changed dimension 35±0.26 to 35±1.26.	11/05/2015	

TYPE SEW71(TENV)		NAME Cross Section B5T	
1-010-1081		REVISION 3 / WEIGHT / SCALE	MATERIAL SS304
DESIGN BY	REVIEWED BY	GA DWG:1-055-0987	TEMA
CHECKED BY	APPROVED BY		
REVIEWED BY	DATE 28/08/2014		